Makina Kapak Kulbu / Cover Handle

780

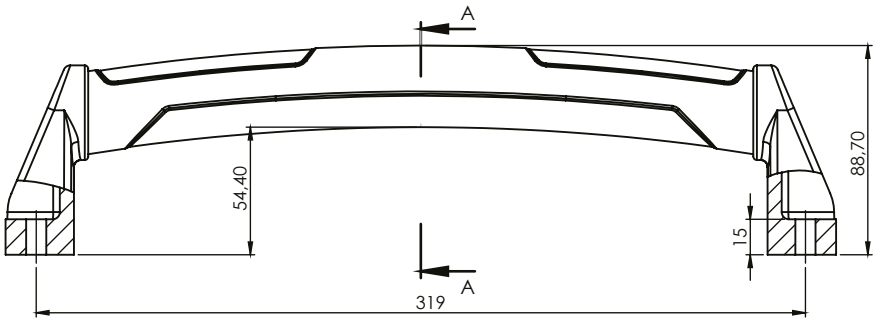

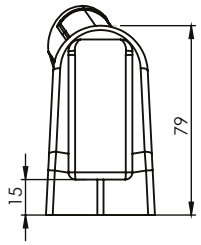

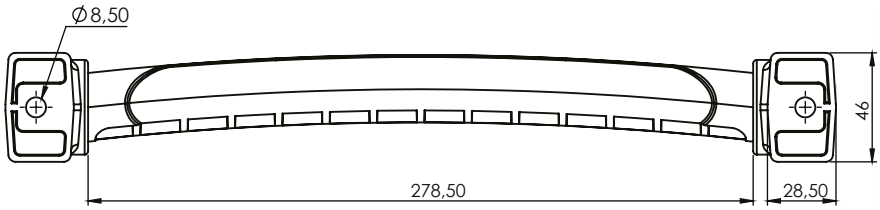

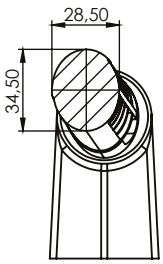

MALZEME / MATERIAL	
GÖVDE BODY	Poliamid Polyamide